Venture18 Ford Bronco 4400

Exploded View
Explosionszeichnung
Vue éclatée
展開図

VENTURE 18

160804 Venture18 U4 Ford Bronco 4400 - VGJR
160805 Venture18 U4 Flux Ford Bronco 4400 - VGJR
160887 Venture18 U4 Ford Bronco 4400 - Loren Healy
160888 Venture18 U4 Flux Ford Bronco 4400 - Loren Healy

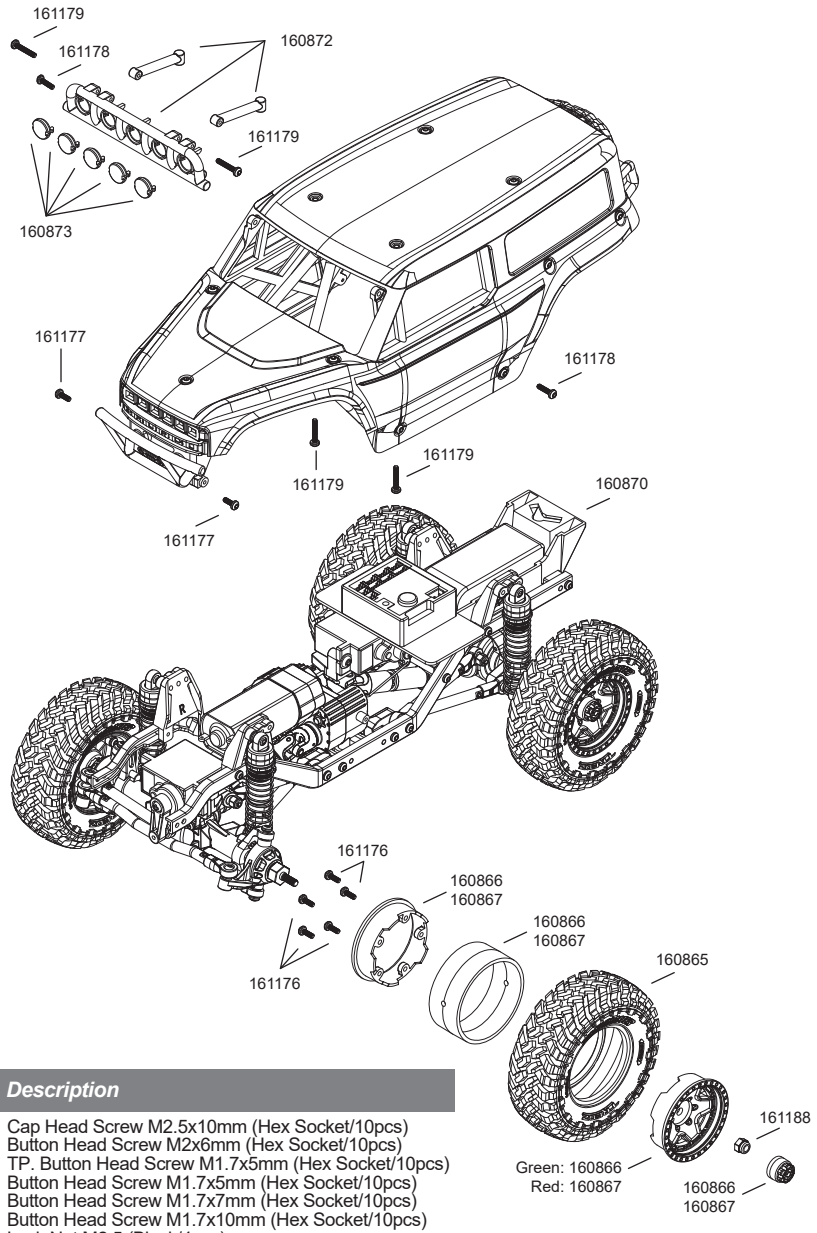

Parts #	Description
107890	Cap Head Screw M2.5x10mm (Hex Socket/10pcs)
120298	Button Head Screw M2x6mm (Hex Socket/10pcs)
161176	TP. Button Head Screw M1.7x5mm (Hex Socket/10pcs)
161177	Button Head Screw M1.7x5mm (Hex Socket/10pcs)
161178	Button Head Screw M1.7x7mm (Hex Socket/10pcs)
161179	Button Head Screw M1.7x10mm (Hex Socket/10pcs)
161188	Lock Nut M2.5 (Black/4pcs)

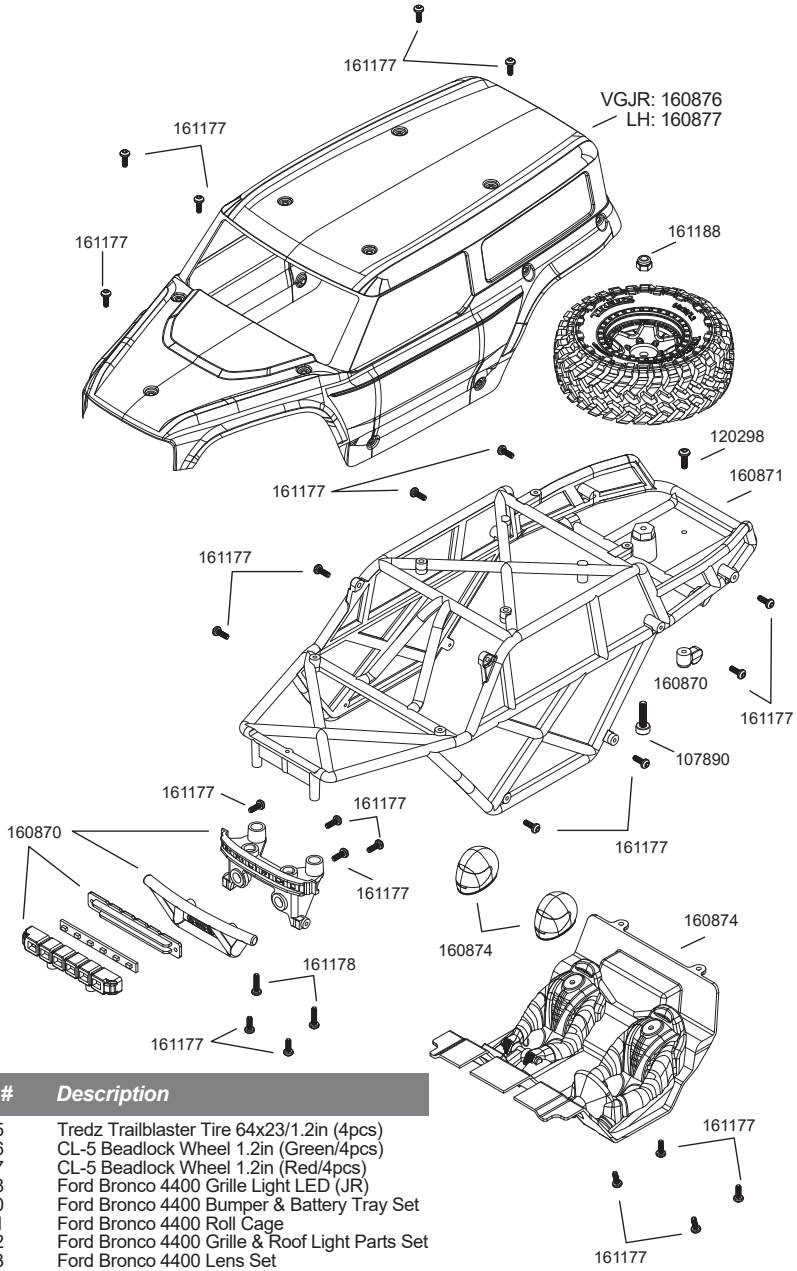

Parts #	Description
160865	Tredz Trailblaster Tire 64x23/1.2in (4pcs)
160866	CL-5 Beadlock Wheel 1.2in (Green/4pcs)
160867	CL-5 Beadlock Wheel 1.2in (Red/4pcs)
160868	Ford Bronco 4400 Grille Light LED (JR)
160870	Ford Bronco 4400 Bumper & Battery Tray Set
160871	Ford Bronco 4400 Roll Cage
160872	Ford Bronco 4400 Grille & Roof Light Parts Set
160873	Ford Bronco 4400 Lens Set
160874	Ford Bronco 4400 Driver Figure Set
160875	Ford Bronco 4400 Clear Body
160876	Ford Bronco 4400 Painted Body - VGJR
160877	Ford Bronco 4400 Painted Body - Loren Healy